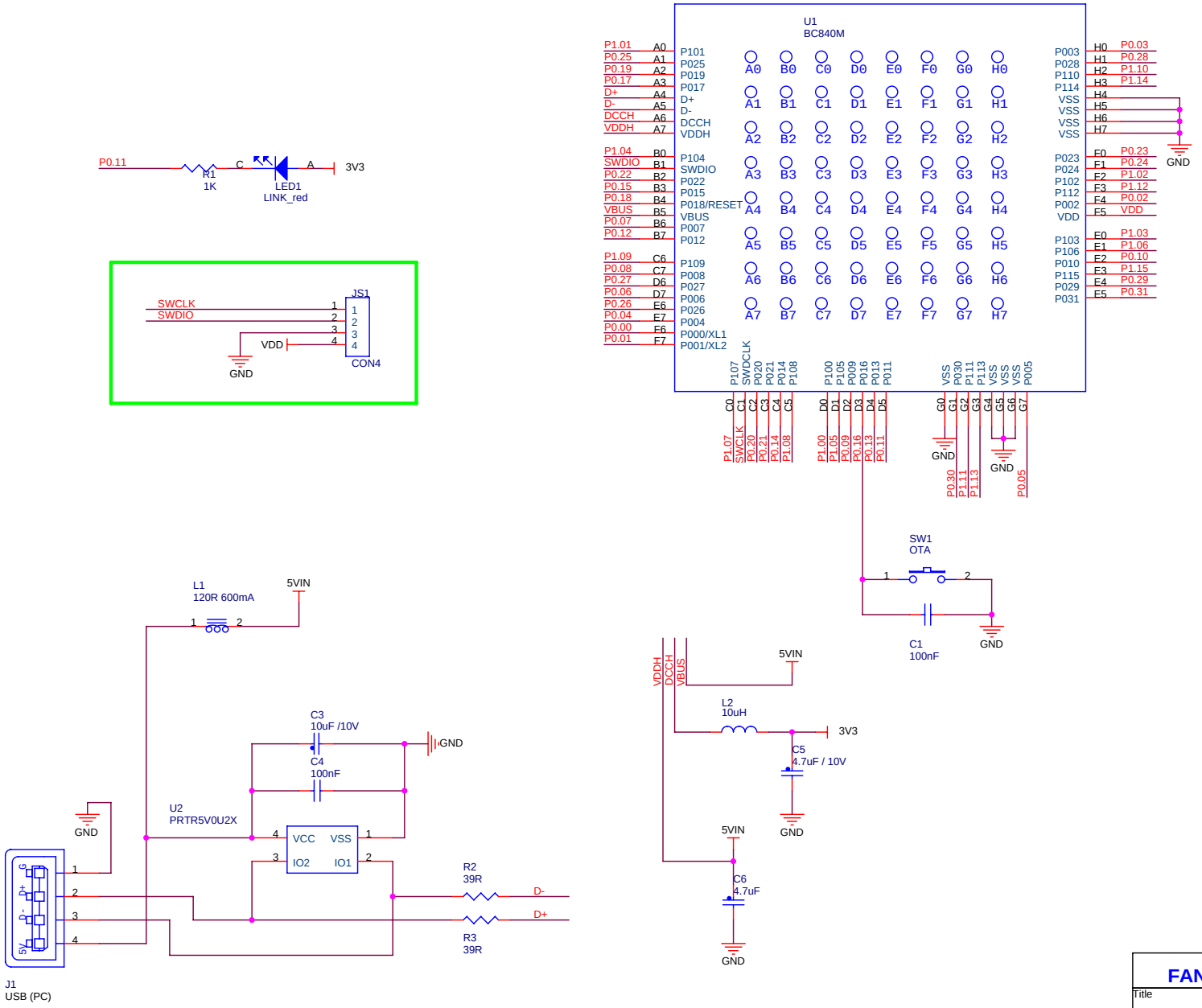

FANSTEL Corporation.

Title: **USB840M DONGLE**

Size	Document Number	Rev
B	BC840M	1.2

Date: Wednesday, November 14, 2018 Sheet 1 of 1